Espressuino v1.1
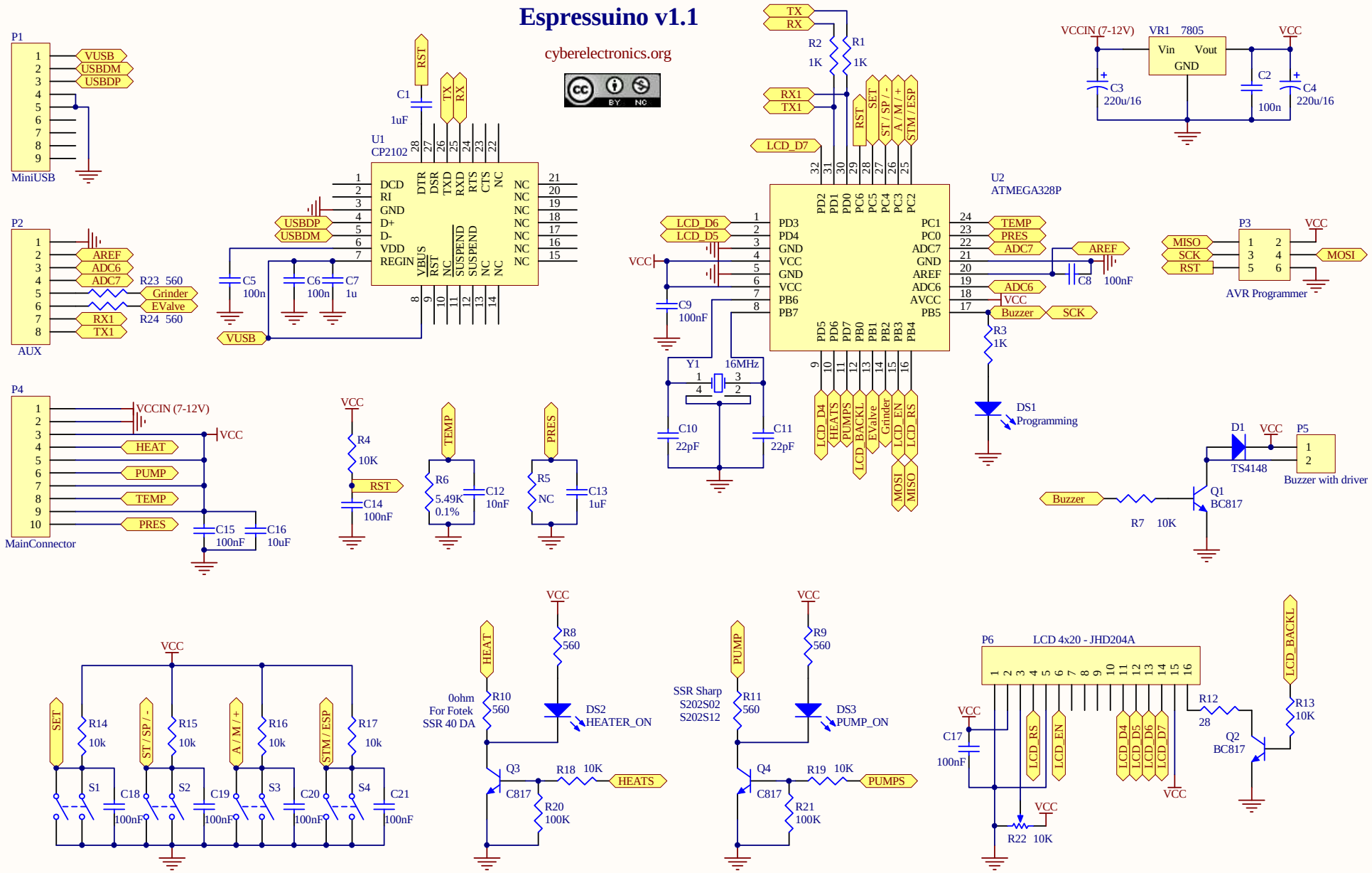
cyberelectronics.org